Végeselem analízis

12. előadás

Pere Balázs

Széchenyi István Egyetem, Alkalmazott Mechanika Tanszék

2014. április 24.

Lemezelméletek

Feltételezések

- A vizsgált test egyik mérete (vastagsága) jóval kisebb, mint a többi mérete.
- Értelmezhető a testhez egy középfelület, amely a vastagságok felezőpontjain meg keresztül.
- A középfelület kezdetben sík.

A $\xi\eta$ sík essen egybe a középfelülettel.

Feltételezések

- A vizsgált test egyik mérete (vastagsága) jóval kisebb, mint a többi mérete.
- Értelmezhető a testhez egy középfelület, amely a vastagságok felezőpontjain meg keresztül.
- A középfelület kezdetben sík.

A $\xi\eta$ sík essen egybe a középfelülettel.

Kirchhoff-Love-lemezelmélet

- A középfelületre merőleges vonalak az alakváltozás után is merőlegesek maradnak a középfelületre.
- A középfelületre merőleges vonalak pontjainak távolsága nem változik.

A Kirchhoff-Love-lemezelmélet nem veszi figyelembe a nyírásból származó alakváltozást.

Reissner-Mindlin-lemezelmélet

Feltételezések:

- A középfelületre merőleges vonalak pontjainak távolsága nem változik.

Kirchhoff-Love-lemezelmélet

- A középfelületre merőleges vonalak az alakváltozás után is merőlegesek maradnak a középfelületre.
- A középfelületre merőleges vonalak pontjainak távolsága nem változik.

A Kirchhoff-Love-lemezelmélet nem veszi figyelembe a nyírásból származó alakváltozást.

Reissner-Mindlin-lemezelmélet

Feltételezések:

- A középfelületre merőleges vonalak pontjainak távolsága nem változik.

Kirchhoff-Love-lemezelmélet

- A középfelületre merőleges vonalak az alakváltozás után is merőlegesek maradnak a középfelületre.
- A középfelületre merőleges vonalak pontjainak távolsága nem változik.

A Kirchhoff-Love-lemezelmélet nem veszi figyelembe a nyírásból származó alakváltozást.

Reissner-Mindlin-lemezelmélet

Feltételezések:

- A középfelületre merőleges vonalak pontjainak távolsága nem változik.

Elmozdulás állapot

Elmozdulás állapot

A lemez középfelületének elmozdulása

$$\vec{u}_0(\zeta) = u_0(\xi,\eta)\,\vec{e}_\xi + v_0(\xi,\eta)\,\vec{e}_\eta + w_0(\xi,\eta)\,\vec{e}_\zeta$$

A középfelület normálisainak szögelfordulása

$$\vec{\varphi}(\xi,\eta) = \varphi_\xi(\xi,\eta)\,\vec{e}_\xi + \varphi_\eta(\xi,\eta)\,\vec{e}_\eta$$

Elmozdulás állapot

Tetszőleges pont elmozdulása:

$$\vec{u}\left(\xi,\eta,\zeta\right)=u\left(\xi,\eta,\zeta\right)\vec{e}_{\xi}+v\left(\xi,\eta,\zeta\right)\vec{e}_{\eta}+w\left(\xi,\eta,\zeta\right)\vec{e}_{\zeta}\approx$$

$$\approx\vec{u}_0(\xi,\eta)+\vec{\varphi}\left(\xi,\eta\right)\times\left(\zeta\vec{e}_{\zeta}\right)=$$

$$=\left(u_0\left(\xi,\eta\right)+\varphi_{\eta}\left(\xi,\eta\right)\zeta\right)\vec{e}_{\xi}+\left(v_0\left(\xi,\eta\right)-\varphi_{\xi}\left(\xi,\eta\right)\zeta\right)\vec{e}_{\eta}+w_0\left(\xi,\eta\right)\vec{e}_{\zeta}$$

$$u\left(\xi,\eta,\zeta\right)=u_0\left(\xi,\eta\right)+\varphi_{\eta}\left(\xi,\eta\right)\zeta$$

$$v\left(\xi,\eta,\zeta\right)=v_0\left(\xi,\eta\right)-\varphi_{\xi}\left(\xi,\eta\right)\zeta$$

$$w\left(\xi,\eta\right)=w_0\left(\xi,\eta\right)$$

Elmozdulás állapot

Tetszőleges pont elmozdulása:

$$\vec{u}\left(\xi,\eta,\zeta\right)=u\left(\xi,\eta,\zeta\right)\vec{e}_{\xi}+v\left(\xi,\eta,\zeta\right)\vec{e}_{\eta}+w\left(\xi,\eta,\zeta\right)\vec{e}_{\zeta}\approx$$

$$\approx\vec{u}_0(\xi,\eta)+\vec{\varphi}\left(\xi,\eta\right)\times\left(\zeta\vec{e}_{\zeta}\right)=$$

$$=\left(u_0\left(\xi,\eta\right)+\varphi_{\eta}\left(\xi,\eta\right)\zeta\right)\vec{e}_{\xi}+\left(v_0\left(\xi,\eta\right)-\varphi_{\xi}\left(\xi,\eta\right)\zeta\right)\vec{e}_{\eta}+w_0\left(\xi,\eta\right)\vec{e}_{\zeta}$$

$$u\left(\xi,\eta,\zeta\right)=u_0\left(\xi,\eta\right)+\varphi_{\eta}\left(\xi,\eta\right)\zeta$$

$$v\left(\xi,\eta,\zeta\right)=v_0\left(\xi,\eta\right)-\varphi_{\xi}\left(\xi,\eta\right)\zeta$$

$$w\left(\xi,\eta\right)=w_0\left(\xi,\eta\right)$$

Alakváltozás állapot

Alakváltozási állapot

Fajlagos nyúlások

$$\varepsilon_\xi = \frac{\partial u}{\partial \xi} = \frac{\partial u_0}{\partial \xi} + \frac{\partial \varphi_\eta}{\partial \xi}\zeta$$

$$\varepsilon_\eta = \frac{\partial v}{\partial \eta} = \frac{\partial v_0}{\partial \eta} - \frac{\partial \varphi_\xi}{\partial \eta}\zeta$$

$$\varepsilon_\zeta = \frac{\partial w}{\partial \zeta} = 0$$

Alakváltozási állapot

Szögtorzulások

$$\gamma_{\xi\eta} = \frac{\partial u}{\partial \eta} + \frac{\partial v}{\partial \xi} = \frac{\partial u_0}{\partial \eta} + \frac{\partial \varphi_\eta}{\partial \eta}\zeta + \frac{\partial v_0}{\partial \xi} - \frac{\partial \varphi_\xi}{\partial \xi}\zeta =$$

$$= \frac{\partial u_0}{\partial \eta} + \frac{\partial v_0}{\partial \xi} + \left(\frac{\partial \varphi_\eta}{\partial \eta} - \frac{\partial \varphi_\xi}{\partial \xi}\right)\zeta$$

$$\gamma_{\eta\zeta} = \frac{\partial v}{\partial \zeta} + \frac{\partial w}{\partial \eta} = -\varphi_\xi + \frac{\partial w_0}{\partial \eta}$$

$$\gamma_{\zeta\xi} = \frac{\partial w}{\partial \xi} + \frac{\partial u}{\partial \zeta} = \frac{\partial w_0}{\partial \xi} + \varphi_\eta$$

Alakváltozási állapot

Összefoglalva

$$\underset{(\xi\eta\zeta)}{\left[\underline{\underline{A}}\right]} = \begin{bmatrix} \frac{\partial u_0}{\partial \xi} + \frac{\partial \varphi_\eta}{\partial \xi}\zeta & \frac{\partial u_0}{\partial \eta} + \frac{\partial v_0}{\partial \xi} + \left(\frac{\partial \varphi_\eta}{\partial \eta} - \frac{\partial \varphi_\xi}{\partial \xi}\right)\zeta & \frac{\partial w_0}{\partial \xi} + \varphi_\eta \\ \frac{\partial u_0}{\partial \eta} + \frac{\partial v_0}{\partial \xi} + \left(\frac{\partial \varphi_\eta}{\partial \eta} - \frac{\partial \varphi_\xi}{\partial \xi}\right)\zeta & \frac{\partial v_0}{\partial \eta} - \frac{\partial \varphi_\xi}{\partial \eta}\zeta & \frac{\partial w_0}{\partial \eta} - \varphi_\xi \\ \frac{\partial w_0}{\partial \xi} + \varphi_\eta & \frac{\partial w_0}{\partial \eta} - \varphi_\xi & 0 \end{bmatrix} =$$

$$= \begin{bmatrix} \frac{\partial u_0}{\partial \xi} & \frac{\partial u_0}{\partial \eta} + \frac{\partial v_0}{\partial \xi} & 0 \\ \frac{\partial u_0}{\partial \eta} + \frac{\partial v_0}{\partial \xi} & \frac{\partial v_0}{\partial \eta} & 0 \\ 0 & 0 & 0 \end{bmatrix} + \begin{bmatrix} \frac{\partial \varphi_\eta}{\partial \xi}\zeta & \left(\frac{\partial \varphi_\eta}{\partial \eta} - \frac{\partial \varphi_\xi}{\partial \xi}\right)\zeta & 0 \\ \left(\frac{\partial \varphi_\eta}{\partial \eta} - \frac{\partial \varphi_\xi}{\partial \xi}\right)\zeta & -\frac{\partial \varphi_\xi}{\partial \eta}\zeta & 0 \\ 0 & 0 & 0 \end{bmatrix} + \begin{bmatrix} 0 & 0 & \frac{\partial w_0}{\partial \xi} + \varphi_\eta \\ 0 & 0 & \frac{\partial w_0}{\partial \eta} - \varphi_\xi \\ \frac{\partial w_0}{\partial \xi} + \varphi_\eta & \frac{\partial w_0}{\partial \eta} - \varphi_\xi & 0 \end{bmatrix}$$

Feszültségi állapot

Feszültségi állapot

Feszültségi hipotézis

$$\underset{(\xi\eta\zeta)}{\left[\underline{\underline{F}}\right]} = \begin{bmatrix} \sigma_\xi & \tau_{\xi\eta} & \tau_{\xi\zeta} \\ \tau_{\eta\xi} & \sigma_\eta & \tau_{\eta\zeta} \\ \tau_{\zeta\xi} & \tau_{\eta\zeta} & 0 \end{bmatrix}$$

$\sigma_\zeta = 0$

Ez nem következik a Hooke-törvényből

Feszültségi állapot

Feszültségi hipotézis

$$\underset{(\xi\eta\zeta)}{[\underline{\underline{F}}]} = \begin{bmatrix} \sigma_\xi & \tau_{\xi\eta} & \tau_{\xi\zeta} \\ \tau_{\eta\xi} & \sigma_\eta & \tau_{\eta\zeta} \\ \tau_{\zeta\xi} & \tau_{\eta\zeta} & 0 \end{bmatrix}$$

$\sigma_\zeta = 0$

Ez nem következik a Hooke-törvényből

Alakváltozási energia

Alakváltozási energia

$$U = \frac{1}{2}\int\limits_{(V)} \underline{\underline{F}} \cdot \cdot \underline{\underline{A}} dV = \frac{1}{2}\int\limits_{(V)} \left(\sigma_\xi \varepsilon_\xi + \sigma_\eta \varepsilon_\eta + \tau_{\xi\eta}\gamma_{\xi\eta} + \tau_{\eta\zeta}\gamma_{\eta\zeta} + \tau_{\zeta\xi}\gamma_{\zeta\xi}\right) dV =$$

$$= \frac{1}{2}\int\limits_{(V)} \left(\sigma_\xi \left(\frac{\partial u_0}{\partial \xi} + \frac{\partial \varphi_\eta}{\partial \xi}\zeta\right) + \sigma_\eta \left(\frac{\partial v_0}{\partial \eta} - \frac{\partial \varphi_\xi}{\partial \eta}\zeta\right)\right) dV +$$

$$+ \frac{1}{2}\int\limits_{(V)} \tau_{\xi\eta} \left(\frac{\partial u_0}{\partial \eta} + \frac{\partial v_0}{\partial \xi} + \left(\frac{\partial \varphi_\eta}{\partial \eta} - \frac{\partial \varphi_\xi}{\partial \xi}\right)\zeta\right) dV +$$

$$+ \frac{1}{2}\int\limits_{(V)} \left(\tau_{\eta\zeta} \left(-\varphi_\xi + \frac{\partial w_0}{\partial \eta}\right) + \tau_{\zeta\xi} \left(\frac{\partial w_0}{\partial \xi} + \varphi_\eta\right)\right) dV =$$

Alakváltozási energia

$$U = \frac{1}{2}\int\limits_{(V)} \underline{\underline{F}} \cdot \cdot \underline{\underline{A}} dV = \frac{1}{2}\int\limits_{(V)} \left(\sigma_\xi \varepsilon_\xi + \sigma_\eta \varepsilon_\eta + \tau_{\xi\eta}\gamma_{\xi\eta} + \tau_{\eta\zeta}\gamma_{\eta\zeta} + \tau_{\zeta\xi}\gamma_{\zeta\xi}\right) dV =$$

$$= \frac{1}{2}\int\limits_{(V)} \left(\sigma_\xi \left(\frac{\partial u_0}{\partial \xi} + \frac{\partial \varphi_\eta}{\partial \xi}\zeta\right) + \sigma_\eta \left(\frac{\partial v_0}{\partial \eta} - \frac{\partial \varphi_\xi}{\partial \eta}\zeta\right)\right) dV +$$

$$+ \frac{1}{2}\int\limits_{(V)} \tau_{\xi\eta} \left(\frac{\partial u_0}{\partial \eta} + \frac{\partial v_0}{\partial \xi} + \left(\frac{\partial \varphi_\eta}{\partial \eta} - \frac{\partial \varphi_\xi}{\partial \xi}\right)\zeta\right) dV +$$

$$+ \frac{1}{2}\int\limits_{(V)} \left(\tau_{\eta\zeta} \left(-\varphi_\xi + \frac{\partial w_0}{\partial \eta}\right) + \tau_{\zeta\xi} \left(\frac{\partial w_0}{\partial \xi} + \varphi_\eta\right)\right) dV =$$

Alakváltozási energia

$$= \frac{1}{2} \int\limits_{(V)} \left(\sigma_\xi \frac{\partial u_0}{\partial \xi} + \sigma_\xi \zeta \frac{\partial \varphi_\eta}{\partial \xi} + \sigma_\eta \frac{\partial v_0}{\partial \eta} - \sigma_\eta \zeta \frac{\partial \varphi_\xi}{\partial \eta} \right) dV +$$

$$+ \frac{1}{2} \int\limits_{(V)} \left(\tau_{\xi\eta} \left(\frac{\partial u_0}{\partial \eta} + \frac{\partial v_0}{\partial \xi} \right) + \tau_{\xi\eta} \zeta \left(\frac{\partial \varphi_\eta}{\partial \eta} - \frac{\partial \varphi_\xi}{\partial \xi} \right) \right) dV +$$

$$+ \frac{1}{2} \int\limits_{(V)} \left(\tau_{\eta\zeta} \left(-\varphi_\xi + \frac{\partial w_0}{\partial \eta} \right) + \tau_{\zeta\xi} \left(\frac{\partial w_0}{\partial \xi} + \varphi_\eta \right) \right) dV =$$

Alakváltozási energia

$$= \frac{1}{2}\int\limits_{(A)}\left(\int\limits_{-\frac{b}{2}}^{\frac{b}{2}}\sigma_\xi d\zeta\frac{\partial u_0}{\partial\xi}+\int\limits_{-\frac{b}{2}}^{\frac{b}{2}}\sigma_\eta d\zeta\frac{\partial v_0}{\partial\eta}+\int\limits_{-\frac{b}{2}}^{\frac{b}{2}}\tau_{\xi\eta}d\zeta\left(\frac{\partial u_0}{\partial\eta}+\frac{\partial v_0}{\partial\xi}\right)\right)dA+$$

$$+\frac{1}{2}\int\limits_{(A)}\left(\int\limits_{-\frac{b}{2}}^{\frac{b}{2}}\sigma_\xi\zeta d\zeta\frac{\partial\varphi_\eta}{\partial\xi}-\int\limits_{-\frac{b}{2}}^{\frac{b}{2}}\sigma_\eta\zeta d\zeta\frac{\partial\varphi_\xi}{\partial\eta}+\int\limits_{-\frac{b}{2}}^{\frac{b}{2}}\tau_{\xi\eta}\zeta d\zeta\left(\frac{\partial\varphi_\eta}{\partial\eta}-\frac{\partial\varphi_\xi}{\partial\xi}\right)\right)dA+$$

$$+\frac{1}{2}\int\limits_{(A)}\left(\int\limits_{-\frac{b}{2}}^{\frac{b}{2}}\tau_{\eta\zeta}d\zeta\left(-\varphi_\xi+\frac{\partial w_0}{\partial\eta}\right)+\int\limits_{-\frac{b}{2}}^{\frac{b}{2}}\tau_{\zeta\xi}d\zeta\left(\frac{\partial w_0}{\partial\xi}+\varphi_\eta\right)\right)dA$$

Alakváltozási energia

Élerők

$$N_\xi = \int_{-\frac{b}{2}}^{\frac{b}{2}} \sigma_\xi d\zeta \qquad N_\eta = \int_{-\frac{b}{2}}^{\frac{b}{2}} \sigma_\eta d\zeta \qquad N_{\xi\eta} = \int_{-\frac{b}{2}}^{\frac{b}{2}} \tau_{\xi\eta} d\zeta$$

$$Q_\xi = \int_{-\frac{b}{2}}^{\frac{b}{2}} \tau_{\zeta\xi} d\zeta \qquad Q_\eta = \int_{-\frac{b}{2}}^{\frac{b}{2}} \tau_{\eta\zeta} d\zeta$$

Alakváltozási energia

Élnyomatékok

$$M_\xi = \int_{-\frac{b}{2}}^{\frac{b}{2}} \sigma_\xi \zeta d\zeta \qquad M_\eta = \int_{-\frac{b}{2}}^{\frac{b}{2}} \sigma_\eta \zeta d\zeta \qquad M_{\xi\eta} = \int_{-\frac{b}{2}}^{\frac{b}{2}} \tau_{\xi\eta} \zeta d\zeta$$

Alakváltozási energia

$$U = \frac{1}{2}\int\limits_{(A)} \left(N_\xi \frac{\partial u_0}{\partial \xi} + N_\eta \frac{\partial v_0}{\partial \eta} + N_{\xi\eta} \left(\frac{\partial u_0}{\partial \eta} + \frac{\partial v_0}{\partial \xi} \right) \right) dA +$$

$$+\frac{1}{2}\int\limits_{(A)} \left(M_\xi \frac{\partial \varphi_\eta}{\partial \xi} - M_\eta \frac{\partial \varphi_\xi}{\partial \eta} + M_{\xi\eta} \left(\frac{\partial \varphi_\eta}{\partial \eta} - \frac{\partial \varphi_\xi}{\partial \xi} \right) \right) dA +$$

$$+\frac{1}{2}\int\limits_{(A)} \left(Q_\eta \left(-\varphi_\xi + \frac{\partial w_0}{\partial \eta} \right) + Q_\xi \left(\frac{\partial w_0}{\partial \xi} + \varphi_\eta \right) \right) dA =$$

Alakváltozási energia

$$= \frac{1}{2} \int\limits_{(A)} \begin{bmatrix} N_\xi & N_\eta & N_{\xi\eta} \end{bmatrix} \begin{bmatrix} \frac{\partial u_0}{\partial \xi} \\ \frac{\partial v_0}{\partial \eta} \\ \frac{\partial u_0}{\partial \eta} + \frac{\partial v_0}{\partial \xi} \end{bmatrix} dA +$$

$$+ \frac{1}{2} \int\limits_{(A)} \begin{bmatrix} M_\xi & M_\eta & M_{\xi\eta} \end{bmatrix} \begin{bmatrix} \frac{\partial \varphi_\eta}{\partial \xi} \\ -\frac{\partial \varphi_\xi}{\partial \eta} \\ \frac{\partial \varphi_\eta}{\partial \eta} - \frac{\partial \varphi_\xi}{\partial \xi} \end{bmatrix} dA +$$

$$+ \frac{1}{2} \int\limits_{(A)} \begin{bmatrix} Q_\eta & Q_\xi \end{bmatrix} \begin{bmatrix} -\varphi_\xi + \frac{\partial w_0}{\partial \eta} \\ \frac{\partial w_0}{\partial \xi} + \varphi_\eta \end{bmatrix} dA$$

Anyagegyenletek

Anyagegyenletek

Hooke-törvény

$$\varepsilon_\xi = \frac{1+\nu}{E}\left(\sigma_\xi - \frac{\nu}{1+\nu}\left(\sigma_\xi + \sigma_\eta\right)\right) = \frac{1}{E}\left(\sigma_\xi - \nu\sigma_\eta\right)$$

$$\varepsilon_\eta = \frac{1+\nu}{E}\left(\sigma_\eta - \frac{\nu}{1+\nu}\left(\sigma_\xi + \sigma_\eta\right)\right) = \frac{1}{E}\left(\sigma_\eta - \nu\sigma_\xi\right)$$

$$\varepsilon_\zeta = \frac{1+\nu}{E}\left(-\frac{\nu}{1+\nu}\left(\sigma_\xi + \sigma_\eta\right)\right) = -\frac{\nu}{E}\left(\sigma_\xi + \sigma_\eta\right) \neq 0$$

ellentmondás!

Anyagegyenletek

Hooke-törvény

$$\gamma_{\xi\eta} = \frac{2\left(1+\nu\right)}{E}\tau_{\xi\eta}$$

$$\gamma_{\eta\zeta} = \frac{2\left(1+\nu\right)}{E}\tau_{\eta\zeta}$$

$$\gamma_{\zeta\xi} = \frac{2\left(1+\nu\right)}{E}\tau_{\zeta\xi}$$

Anyagegyenletek

Hooke-törvény

$$\sigma_\xi = \frac{E}{1-\nu^2}\left(\varepsilon_\xi + \nu\varepsilon_\eta\right)$$

$$\sigma_\eta = \frac{E}{1-\nu^2}\left(\varepsilon_\eta + \nu\varepsilon_\xi\right)$$

$$\tau_{\xi\eta} = \frac{E}{2\left(1+\nu\right)}\gamma_{\xi\eta}$$

$$\tau_{\eta\zeta} = \frac{E}{2\left(1+\nu\right)}\gamma_{\eta\zeta}$$

$$\tau_{\zeta\xi} = \frac{E}{2\left(1+\nu\right)}\gamma_{\zeta\xi}$$

Anyagegyenletek

$$\sigma_\xi = \frac{E}{1-\nu^2}\left(\frac{\partial u_0}{\partial \xi} + \frac{\partial \varphi_\eta}{\partial \xi}\zeta + \nu\left(\frac{\partial v_0}{\partial \eta} - \frac{\partial \varphi_\xi}{\partial \eta}\zeta\right)\right)$$

$$\sigma_\eta = \frac{E}{1-\nu^2}\left(\frac{\partial v_0}{\partial \eta} - \frac{\partial \varphi_\xi}{\partial \eta}\zeta + \nu\left(\frac{\partial u_0}{\partial \xi} + \frac{\partial \varphi_\eta}{\partial \xi}\zeta\right)\right)$$

$$\tau_{\xi\eta} = \frac{E}{2\left(1+\nu\right)}\left(\frac{\partial u_0}{\partial \eta} + \frac{\partial v_0}{\partial \xi} + \left(\frac{\partial \varphi_\eta}{\partial \eta} - \frac{\partial \varphi_\xi}{\partial \xi}\right)\zeta\right)$$

$$\tau_{\eta\zeta} = \frac{E}{2\left(1+\nu\right)}\left(-\varphi_\xi + \frac{\partial w_0}{\partial \eta}\right)$$

$$\tau_{\zeta\xi} = \frac{E}{2\left(1+\nu\right)}\left(\frac{\partial w_0}{\partial \xi} + \varphi_\eta\right)$$

Anyagegyenletek

$$\sigma_\xi = \frac{E}{1-\nu^2}\left(\frac{\partial u_0}{\partial \xi} + \nu\frac{\partial v_0}{\partial \eta} + \left(\frac{\partial \varphi_\eta}{\partial \xi} - \nu\frac{\partial \varphi_\xi}{\partial \eta}\right)\zeta\right)$$

$$\sigma_\eta = \frac{E}{1-\nu^2}\left(\frac{\partial v_0}{\partial \eta} + \nu\frac{\partial u_0}{\partial \xi} + \left(-\frac{\partial \varphi_\xi}{\partial \eta} + \nu\frac{\partial \varphi_\eta}{\partial \xi}\right)\zeta\right)$$

$$\tau_{\xi\eta} = \frac{E}{2\left(1+\nu\right)}\left(\frac{\partial u_0}{\partial \eta} + \frac{\partial v_0}{\partial \xi} + \left(\frac{\partial \varphi_\eta}{\partial \eta} - \frac{\partial \varphi_\xi}{\partial \xi}\right)\zeta\right)$$

$$\tau_{\eta\zeta} = \frac{E}{2\left(1+\nu\right)}\left(\frac{\partial w_0}{\partial \eta} - \varphi_\xi\right)$$

$$\tau_{\zeta\xi} = \frac{E}{2\left(1+\nu\right)}\left(\frac{\partial w_0}{\partial \xi} + \varphi_\eta\right)$$

Élerők, élnyomatékok kifejtése

Élerők

$$N_\xi = \int_{-\frac{b}{2}}^{\frac{b}{2}} \sigma_\xi d\zeta = \int_{-\frac{b}{2}}^{\frac{b}{2}} \frac{E}{1-\nu^2}\left(\frac{\partial u_0}{\partial \xi} + \nu\frac{\partial v_0}{\partial \eta} + \left(\frac{\partial \varphi_\eta}{\partial \xi} - \nu\frac{\partial \varphi_\xi}{\partial \eta}\right)\zeta\right) d\zeta =$$

$$= \frac{E}{1-\nu^2}\left(\frac{\partial u_0}{\partial \xi} + \nu\frac{\partial v_0}{\partial \eta}\right)\underbrace{\int_{-\frac{b}{2}}^{\frac{b}{2}} d\zeta}_{b} + \frac{E}{1-\nu^2}\left(\frac{\partial \varphi_\eta}{\partial \xi} - \nu\frac{\partial \varphi_\xi}{\partial \eta}\right)\underbrace{\int_{-\frac{b}{2}}^{\frac{b}{2}} \zeta d\zeta}_{0} =$$

$$= \frac{Eb}{1-\nu^2}\left(\frac{\partial u_0}{\partial \xi} + \nu\frac{\partial v_0}{\partial \eta}\right)$$

Élerők

$$N_\eta = \int_{-\frac{b}{2}}^{\frac{b}{2}} \sigma_\eta d\zeta = \int_{-\frac{b}{2}}^{\frac{b}{2}} \frac{E}{1-\nu^2}\left(\frac{\partial v_0}{\partial \eta} + \nu\frac{\partial u_0}{\partial \xi} + \left(-\frac{\partial \varphi_\xi}{\partial \eta} + \nu\frac{\partial \varphi_\eta}{\partial \xi}\right)\zeta\right) d\zeta =$$

$$= \frac{E}{1-\nu^2}\left(\frac{\partial v_0}{\partial \eta} + \nu\frac{\partial u_0}{\partial \xi}\right)\underbrace{\int_{-\frac{b}{2}}^{\frac{b}{2}} d\zeta}_{b} + \frac{E}{1-\nu^2}\left(-\frac{\partial \varphi_\xi}{\partial \eta} + \nu\frac{\partial \varphi_\eta}{\partial \xi}\right)\underbrace{\int_{-\frac{b}{2}}^{\frac{b}{2}} \zeta d\zeta}_{0} =$$

$$= \frac{Eb}{1-\nu^2}\left(\frac{\partial v_0}{\partial \eta} + \nu\frac{\partial u_0}{\partial \xi}\right)$$

Élerők

$$N_{\xi\eta} = \int_{-\frac{b}{2}}^{\frac{b}{2}} \tau_{\xi\eta} d\zeta = \int_{-\frac{b}{2}}^{\frac{b}{2}} \frac{E}{2\left(1+\nu\right)} \left(\frac{\partial u_0}{\partial \eta} + \frac{\partial v_0}{\partial \xi} + \left(\frac{\partial \varphi_\eta}{\partial \eta} - \frac{\partial \varphi_\xi}{\partial \xi} \right) \zeta \right) d\zeta =$$

$$= \frac{E}{2\left(1+\nu\right)} \left(\frac{\partial u_0}{\partial \eta} + \frac{\partial v_0}{\partial \xi} \right) \underbrace{\int_{-\frac{b}{2}}^{\frac{b}{2}} d\zeta}_{b} + \frac{E}{2\left(1+\nu\right)} \left(\frac{\partial \varphi_\eta}{\partial \eta} - \frac{\partial \varphi_\xi}{\partial \xi} \right) \underbrace{\int_{-\frac{b}{2}}^{\frac{b}{2}} \zeta d\zeta}_{0} =$$

$$= \frac{Eb}{2\left(1+\nu\right)} \left(\frac{\partial u_0}{\partial \eta} + \frac{\partial v_0}{\partial \xi} \right)$$

Élnyomatékok

$$M_\xi = \int_{-\frac{b}{2}}^{\frac{b}{2}} \sigma_\xi \zeta d\zeta = \int_{-\frac{b}{2}}^{\frac{b}{2}} \frac{E}{1-\nu^2}\left(\frac{\partial u_0}{\partial \xi} + \nu \frac{\partial v_0}{\partial \eta} + \left(\frac{\partial \varphi_\eta}{\partial \xi} - \nu \frac{\partial \varphi_\xi}{\partial \eta}\right)\zeta\right)\zeta d\zeta =$$

$$= \frac{E}{1-\nu^2}\left(\frac{\partial u_0}{\partial \xi} + \nu \frac{\partial v_0}{\partial \eta}\right)\underbrace{\int_{-\frac{b}{2}}^{\frac{b}{2}} \zeta d\zeta}_{0} + \frac{E}{1-\nu^2}\left(\frac{\partial \varphi_\eta}{\partial \xi} - \nu \frac{\partial \varphi_\xi}{\partial \eta}\right)\underbrace{\int_{-\frac{b}{2}}^{\frac{b}{2}} \zeta^2 d\zeta}_{\frac{b^3}{12}} =$$

$$= \frac{Eb^3}{12\left(1-\nu^2\right)}\left(\frac{\partial \varphi_\eta}{\partial \xi} - \nu \frac{\partial \varphi_\xi}{\partial \eta}\right)$$

Élnyomatékok

$$M_\eta = \int_{-\frac{b}{2}}^{\frac{b}{2}} \sigma_\eta \zeta d\zeta = \int_{-\frac{b}{2}}^{\frac{b}{2}} \frac{E}{1-\nu^2}\left(\frac{\partial v_0}{\partial \eta} + \nu \frac{\partial u_0}{\partial \xi} + \left(-\frac{\partial \varphi_\xi}{\partial \eta} + \nu \frac{\partial \varphi_\eta}{\partial \xi}\right)\zeta\right)\zeta d\zeta =$$

$$= \frac{E}{1-\nu^2}\left(\frac{\partial v_0}{\partial \eta} + \nu \frac{\partial u_0}{\partial \xi}\right)\underbrace{\int_{-\frac{b}{2}}^{\frac{b}{2}} \zeta d\zeta}_{0} + \frac{E}{1-\nu^2}\left(-\frac{\partial \varphi_\xi}{\partial \eta} + \nu \frac{\partial \varphi_\eta}{\partial \xi}\right)\underbrace{\int_{-\frac{b}{2}}^{\frac{b}{2}} \zeta^2 d\zeta}_{\frac{b^3}{12}} =$$

$$= \frac{Eb^3}{12\left(1-\nu^2\right)}\left(-\frac{\partial \varphi_\xi}{\partial \eta} + \nu \frac{\partial \varphi_\eta}{\partial \xi}\right)$$

Élnyomatékok

$$M_{\xi\eta} = \int_{-\frac{b}{2}}^{\frac{b}{2}} \tau_{\xi\eta}\zeta d\zeta = \int_{-\frac{b}{2}}^{\frac{b}{2}} \frac{E}{2\left(1+\nu\right)}\left(\frac{\partial u_0}{\partial \eta} + \frac{\partial v_0}{\partial \xi} + \left(\frac{\partial \varphi_\eta}{\partial \eta} - \frac{\partial \varphi_\xi}{\partial \xi}\right)\zeta\right)\zeta d\zeta =$$

$$= \frac{E}{2\left(1+\nu\right)}\left(\frac{\partial u_0}{\partial \eta} + \frac{\partial v_0}{\partial \xi}\right)\underbrace{\int_{-\frac{b}{2}}^{\frac{b}{2}} \zeta d\zeta}_{0} + \frac{E}{2\left(1+\nu\right)}\left(\frac{\partial \varphi_\eta}{\partial \eta} - \frac{\partial \varphi_\xi}{\partial \xi}\right)\underbrace{\int_{-\frac{b}{2}}^{\frac{b}{2}} \zeta^2 d\zeta}_{\frac{b^3}{12}} =$$

$$= \frac{Eb^3}{24\left(1+\nu\right)}\left(\frac{\partial \varphi_\eta}{\partial \eta} - \frac{\partial \varphi_\xi}{\partial \xi}\right)$$

Élerők

$$Q_\xi = \int_{-\frac{b}{2}}^{\frac{b}{2}} \tau_{\zeta\xi} d\zeta = \int_{-\frac{b}{2}}^{\frac{b}{2}} \frac{E}{2\left(1+\nu\right)} \left(\frac{\partial w_0}{\partial \eta} - \varphi_\xi \right) d\zeta =$$

$$= \frac{E}{2\left(1+\nu\right)} \left(\frac{\partial w_0}{\partial \eta} - \varphi_\xi \right) \underbrace{\int_{-\frac{b}{2}}^{\frac{b}{2}} d\zeta}_{b} =$$

$$= \frac{Eb}{2\left(1+\nu\right)} \left(\frac{\partial w_0}{\partial \eta} - \varphi_\xi \right)$$

Élerők

$$Q_\eta = \int_{-\frac{b}{2}}^{\frac{b}{2}} \tau_{\eta\zeta} d\zeta = \int_{-\frac{b}{2}}^{\frac{b}{2}} \frac{E}{2\left(1+\nu\right)} \left(\frac{\partial w_0}{\partial \xi} + \varphi_\eta \right) d\zeta =$$

$$= \frac{E}{2\left(1+\nu\right)} \left(\frac{\partial w_0}{\partial \xi} + \varphi_\eta \right) \underbrace{\int_{-\frac{b}{2}}^{\frac{b}{2}} d\zeta}_{b} =$$

$$= \frac{Eb}{2\left(1+\nu\right)} \left(\frac{\partial w_0}{\partial \xi} + \varphi_\eta \right)$$

Ahol kihasználtuk, hogy

$$\int_{-\frac{b}{2}}^{\frac{b}{2}} d\zeta = [\zeta]_{-\frac{b}{2}}^{\frac{b}{2}} = \frac{b}{2} - \left(-\frac{b}{2}\right) = b$$

$$\int_{-\frac{b}{2}}^{\frac{b}{2}} \zeta d\zeta = \left[\frac{\zeta^2}{2}\right]_{-\frac{b}{2}}^{\frac{b}{2}} = \frac{b^2}{8} - \frac{b^2}{8} = 0$$

$$\int_{-\frac{b}{2}}^{\frac{b}{2}} \zeta^2 d\zeta = \left[\frac{\zeta^3}{3}\right]_{-\frac{b}{2}}^{\frac{b}{2}} = \frac{b^3}{24} - \left(-\frac{b^3}{24}\right) = \frac{b^3}{12}$$

Élerők, élnyomatékok

Összefoglalva

$$\begin{bmatrix} N_\xi \\ N_\eta \\ N_{\xi\eta} \end{bmatrix} = \begin{bmatrix} \frac{Eb}{1-\nu^2}\left(\frac{\partial u_0}{\partial \xi} + \nu \frac{\partial v_0}{\partial \eta}\right) \\ \frac{Eb}{1-\nu^2}\left(\frac{\partial v_0}{\partial \eta} + \nu \frac{\partial u_0}{\partial \xi}\right) \\ \frac{Eb}{2(1+\nu)}\left(\frac{\partial u_0}{\partial \eta} + \frac{\partial v_0}{\partial \xi}\right) \end{bmatrix} = \frac{Eb}{1-\nu^2} \begin{bmatrix} 1 & \nu & 0 \\ \nu & 1 & 0 \\ 0 & 0 & \frac{1-\nu}{2} \end{bmatrix} \begin{bmatrix} \frac{\partial u_0}{\partial \xi} \\ \frac{\partial v_0}{\partial \eta} \\ \frac{\partial u_0}{\partial \eta} + \frac{\partial v_0}{\partial \xi} \end{bmatrix}$$

$$\begin{bmatrix} M_\xi \\ M_\eta \\ M_{\xi\eta} \end{bmatrix} = \begin{bmatrix} \frac{Eb^3}{12(1-\nu^2)}\left(\frac{\partial \varphi_\eta}{\partial \xi} - \nu \frac{\partial \varphi_\xi}{\partial \eta}\right) \\ \frac{Eb^3}{12(1-\nu^2)}\left(-\frac{\partial \varphi_\xi}{\partial \eta} + \nu \frac{\partial \varphi_\eta}{\partial \xi}\right) \\ \frac{Eb^3}{24(1+\nu)}\left(\frac{\partial \varphi_\eta}{\partial \eta} - \frac{\partial \varphi_\xi}{\partial \xi}\right) \end{bmatrix} = \frac{Eb^3}{12\left(1-\nu^2\right)} \begin{bmatrix} 1 & \nu & 0 \\ \nu & 1 & 0 \\ 0 & 0 & \frac{1-\nu}{2} \end{bmatrix} \begin{bmatrix} \frac{\partial \varphi_\eta}{\partial \xi} \\ -\frac{\partial \varphi_\xi}{\partial \eta} \\ \frac{\partial \varphi_\eta}{\partial \eta} - \frac{\partial \varphi_\xi}{\partial \xi} \end{bmatrix}$$

$$\begin{bmatrix} Q_\xi \\ Q_\eta \end{bmatrix} = \begin{bmatrix} \frac{Eb}{2(1+\nu)}\left(\frac{\partial w_0}{\partial \eta} - \varphi_\xi\right) \\ \frac{Eb}{2(1+\nu)}\left(\frac{\partial w_0}{\partial \xi} + \varphi_\eta\right) \end{bmatrix} = \frac{Eb}{2\left(1+\nu\right)} \begin{bmatrix} 1 & 0 \\ 0 & 1 \end{bmatrix} \begin{bmatrix} \frac{\partial w_0}{\partial \eta} - \varphi_\xi \\ \frac{\partial w_0}{\partial \xi} + \varphi_\eta \end{bmatrix}$$

Külső erők munkája

Külső erők munkája

$$W_k = \int\limits_{(A_p)} \vec{u} \cdot \vec{p}_0 dA + \int\limits_{(V)} \vec{u} \cdot \vec{f} dV =$$

$$= \int\limits_{(A_\zeta)} \vec{u} \cdot \vec{p}_0 dA + \int\limits_{(A_n)} \vec{u} \cdot \vec{p}_0 dA + \int\limits_{(V)} \vec{u} \cdot \vec{f} dV =$$

$$= \int\limits_{(A_\zeta)} w_0 p dA + \int\limits_{(A_n)} \vec{u} \cdot \underline{\underline{F}} \cdot \vec{n} dA + \int\limits_{(A_\zeta)} \int\limits_{-\frac{b}{2}}^{\frac{b}{2}} \vec{u} \cdot \vec{f} d\zeta dA =$$

Külső erők munkája

$$W_k = \int\limits_{(A_p)} \vec{u} \cdot \vec{p}_0 dA + \int\limits_{(V)} \vec{u} \cdot \vec{f} dV =$$

$$= \int\limits_{(A_\zeta)} \vec{u} \cdot \vec{p}_0 dA + \int\limits_{(A_n)} \vec{u} \cdot \vec{p}_0 dA + \int\limits_{(V)} \vec{u} \cdot \vec{f} dV =$$

$$= \int\limits_{(A_\zeta)} w_0 p dA + \int\limits_{(A_n)} \vec{u} \cdot \underline{\underline{F}} \cdot \vec{n} dA + \int\limits_{(A_\zeta)} \int\limits_{-\frac{b}{2}}^{\frac{b}{2}} \vec{u} \cdot \vec{f} d\zeta dA =$$

Külső erők munkája

$$W_k = \int\limits_{(A_p)} \vec{u} \cdot \vec{p}_0 dA + \int\limits_{(V)} \vec{u} \cdot \vec{f} dV =$$

$$= \int\limits_{(A_\zeta)} \vec{u} \cdot \vec{p}_0 dA + \int\limits_{(A_n)} \vec{u} \cdot \vec{p}_0 dA + \int\limits_{(V)} \vec{u} \cdot \vec{f} dV =$$

$$= \int\limits_{(A_\zeta)} w_0 p dA + \int\limits_{(A_n)} \vec{u} \cdot \underline{\underline{F}} \cdot \vec{n} dA + \int\limits_{(A_\zeta)} \int\limits_{-\frac{b}{2}}^{\frac{b}{2}} \vec{u} \cdot \vec{f} d\zeta dA =$$

Külső erők munkája

$$= \int\limits_{(A_\zeta^-)} \begin{bmatrix} u_0 & v_0 & w_0 \end{bmatrix} \begin{bmatrix} 0 \\ 0 \\ p^- \end{bmatrix} dA - \int\limits_{(A_\zeta^+)} \begin{bmatrix} u_0 & v_0 & w_0 \end{bmatrix} \begin{bmatrix} 0 \\ 0 \\ p^+ \end{bmatrix} dA + \int\limits_{(A_n)} \vec{u} \cdot \underline{\underline{F}} \cdot \vec{n} dA + \int\limits_{(A_\zeta)} \int\limits_{-\frac{b}{2}}^{\frac{b}{2}} \vec{u} \cdot \vec{f} d\zeta dA =$$

$$= \int\limits_{(A_\zeta^-)} \begin{bmatrix} u_0 & v_0 & w_0 \end{bmatrix} \begin{bmatrix} 0 \\ 0 \\ p^- \end{bmatrix} dA - \int\limits_{(A_\zeta^+)} \begin{bmatrix} u_0 & v_0 & w_0 \end{bmatrix} \begin{bmatrix} 0 \\ 0 \\ p^+ \end{bmatrix} dA +$$

$$+ \int\limits_{(A_n)} \left((\vec{u} \cdot \vec{n}) \vec{n} + (\vec{u} \cdot \vec{t}) \vec{t} + (\vec{u} \cdot \vec{e}_\zeta) \vec{e}_\zeta \right) \cdot \left(\sigma_n \vec{n} + \tau_{tn} \vec{t} + \tau_{\zeta n} \vec{e}_\zeta \right) dA + \int\limits_{(A_\zeta)} \int\limits_{-\frac{b}{2}}^{\frac{b}{2}} \begin{bmatrix} u_0 & v_0 & w_0 \end{bmatrix} \begin{bmatrix} f_\xi \\ f_\eta \\ f_\zeta \end{bmatrix} d\zeta dA =$$

Külső erők munkája

$$= \int\limits_{(A_\zeta^-)} \begin{bmatrix} u_0 & v_0 & w_0 \end{bmatrix} \begin{bmatrix} 0 \\ 0 \\ p^- \end{bmatrix} dA - \int\limits_{(A_\zeta^+)} \begin{bmatrix} u_0 & v_0 & w_0 \end{bmatrix} \begin{bmatrix} 0 \\ 0 \\ p^+ \end{bmatrix} dA +$$

$$+ \int\limits_{(A_n)} \left((\vec{u} \cdot \vec{n})\, \sigma_n + \left(\vec{u} \cdot \vec{t}\right) \tau_{tn} + (\vec{u} \cdot \vec{e}_\zeta)\, \tau_{\zeta n} \right) dA + \int\limits_{(A_\zeta)} \int\limits_{-\frac{b}{2}}^{\frac{b}{2}} \begin{bmatrix} u_0 & v_0 & w_0 \end{bmatrix} \begin{bmatrix} f_\xi \\ f_\eta \\ f_\zeta \end{bmatrix} d\zeta dA =$$

Külső erők munkája

$$= \int\limits_{(A_\zeta^-)} \begin{bmatrix} u_0 & v_0 & w_0 \end{bmatrix} \begin{bmatrix} 0 \\ 0 \\ p^- \end{bmatrix} dA - \int\limits_{(A_\zeta^+)} \begin{bmatrix} u_0 & v_0 & w_0 \end{bmatrix} \begin{bmatrix} 0 \\ 0 \\ p^+ \end{bmatrix} dA +$$

$$+ \int\limits_{(A_n)} \left(\left((u_0 + \varphi_\eta \zeta)\, \vec{e}_\xi + (v_0 - \varphi_\xi \zeta)\, \vec{e}_\eta + w_0 \vec{e}_\zeta \right) \cdot \vec{n} \right) \sigma_n dA +$$

$$+ \int\limits_{(A_n)} \left(\left((u_0 + \varphi_\eta \zeta)\, \vec{e}_\xi + (v_0 - \varphi_\xi \zeta)\, \vec{e}_\eta + w_0 \vec{e}_\zeta \right) \cdot \vec{t} \right) \tau_{tn} dA +$$

$$+ \int\limits_{(A_n)} \left(\left((u_0 + \varphi_\eta \zeta)\, \vec{e}_\xi + (v_0 - \varphi_\xi \zeta)\, \vec{e}_\eta + w_0 \vec{e}_\zeta \right) \cdot \vec{e}_\zeta \right) \tau_{\zeta n} dA +$$

$$+ \int\limits_{(A_\zeta)} \int\limits_{-\frac{b}{2}}^{\frac{b}{2}} \begin{bmatrix} u_0 & v_0 & w_0 \end{bmatrix} \begin{bmatrix} f_\xi \\ f_\eta \\ f_\zeta \end{bmatrix} d\zeta dA =$$

Külső erők munkája

$$= \int\limits_{(A_\zeta^-)} \begin{bmatrix} u_0 & v_0 & w_0 \end{bmatrix} \begin{bmatrix} 0 \\ 0 \\ p^- \end{bmatrix} dA - \int\limits_{(A_\zeta^+)} \begin{bmatrix} u_0 & v_0 & w_0 \end{bmatrix} \begin{bmatrix} 0 \\ 0 \\ p^+ \end{bmatrix} dA +$$

$$+ \int\limits_{(A_n)} \left(\left(u_0 + \varphi_\eta \zeta \right) n_\xi + \left(v_0 - \varphi_\xi \zeta \right) n_\eta \right) \sigma_n dA +$$

$$+ \int\limits_{(A_n)} \left(\left(u_0 + \varphi_\eta \zeta \right) t_\xi + \left(v_0 - \varphi_\xi \zeta \right) t_\eta \right) \tau_{tn} dA +$$

$$+ \int\limits_{(A_n)} w_0 \tau_{\zeta n} dA +$$

$$+ \int\limits_{(A_\zeta)} \int\limits_{-\frac{b}{2}}^{\frac{b}{2}} \begin{bmatrix} u_0 & v_0 & w_0 \end{bmatrix} \begin{bmatrix} f_\xi \\ f_\eta \\ f_\zeta \end{bmatrix} d\zeta dA =$$

Külső erők munkája

$$= \int\limits_{(A_\zeta^-)} \begin{bmatrix} u_0 & v_0 & w_0 \end{bmatrix} \begin{bmatrix} 0 \\ 0 \\ p^- \end{bmatrix} dA - \int\limits_{(A_\zeta^+)} \begin{bmatrix} u_0 & v_0 & w_0 \end{bmatrix} \begin{bmatrix} 0 \\ 0 \\ p^+ \end{bmatrix} dA +$$

$$+ \int\limits_{(A_n)} \left(u_0 n_\xi \sigma_n + \varphi_\eta n_\xi \zeta \sigma_n + v_0 n_\eta \sigma_n - \varphi_\xi n_\eta \zeta \sigma_n\right) dA +$$

$$+ \int\limits_{(A_n)} \left(u_0 t_\xi \tau_{tn} + \varphi_\eta t_\xi \zeta \tau_{tn} + v_0 t_\eta \tau_{tn} - \varphi_\xi t_\eta \zeta \tau_{tn}\right) dA +$$

$$+ \int\limits_{(A_n)} w_0 \tau_{\zeta n} dA +$$

$$+ \int\limits_{(A_\zeta)} \int\limits_{-\frac{b}{2}}^{\frac{b}{2}} \begin{bmatrix} u_0 & v_0 & w_0 \end{bmatrix} \begin{bmatrix} f_\xi \\ f_\eta \\ f_\zeta \end{bmatrix} d\zeta dA =$$

Külső erők munkája

$$= \int\limits_{(A_\zeta^-)} \begin{bmatrix} u_0 & v_0 & w_0 \end{bmatrix} \begin{bmatrix} 0 \\ 0 \\ p^- \end{bmatrix} dA - \int\limits_{(A_\zeta^+)} \begin{bmatrix} u_0 & v_0 & w_0 \end{bmatrix} \begin{bmatrix} 0 \\ 0 \\ p^+ \end{bmatrix} dA +$$

$$+ \int\limits_{(s)} \left(u_0 n_\xi \int\limits_{-\frac{b}{2}}^{\frac{b}{2}} \sigma_n d\zeta + \varphi_\eta n_\xi \int\limits_{-\frac{b}{2}}^{\frac{b}{2}} \zeta \sigma_n d\zeta + v_0 n_\eta \int\limits_{-\frac{b}{2}}^{\frac{b}{2}} \sigma_n d\zeta - \varphi_\xi n_\eta \int\limits_{-\frac{b}{2}}^{\frac{b}{2}} \zeta \sigma_n d\zeta \right) ds +$$

$$+ \int\limits_{(s)} \left(u_0 t_\xi \int\limits_{-\frac{b}{2}}^{\frac{b}{2}} \tau_{tn} d\zeta + \varphi_\eta t_\xi \int\limits_{-\frac{b}{2}}^{\frac{b}{2}} \zeta \tau_{tn} d\zeta + v_0 t_\eta \int\limits_{-\frac{b}{2}}^{\frac{b}{2}} \tau_{tn} d\zeta - \varphi_\xi t_\eta \int\limits_{-\frac{b}{2}}^{\frac{b}{2}} \zeta \tau_{tn} d\zeta \right) ds +$$

$$+ \int\limits_{(s)} w_0 \int\limits_{-\frac{b}{2}}^{\frac{b}{2}} \tau_{\zeta n} d\zeta ds +$$

$$+ \int\limits_{(A_\zeta)} \int\limits_{-\frac{b}{2}}^{\frac{b}{2}} \begin{bmatrix} u_0 & v_0 & w_0 \end{bmatrix} \begin{bmatrix} f_\xi \\ f_\eta \\ f_\zeta \end{bmatrix} d\zeta dA =$$

Külső erők munkája

$$= \int\limits_{(A_\zeta^-)} \begin{bmatrix} u_0 & v_0 & w_0 \end{bmatrix} \begin{bmatrix} 0 \\ 0 \\ p^- \end{bmatrix} dA - \int\limits_{(A_\zeta^+)} \begin{bmatrix} u_0 & v_0 & w_0 \end{bmatrix} \begin{bmatrix} 0 \\ 0 \\ p^+ \end{bmatrix} dA +$$

$$+ \int\limits_{(s)} (u_0 n_\xi N_n + \varphi_\eta n_\xi M_n + v_0 n_\eta N_n - \varphi_\xi n_\eta M_n)\, ds +$$

$$+ \int\limits_{(s)} (u_0 t_\xi N_{tn} + \varphi_\eta t_\xi M_{tn} + v_0 t_\eta N_{tn} - \varphi_\xi t_\eta M_{tn})\, ds +$$

$$+ \int\limits_{(s)} w_0 Q_n ds +$$

$$+ \int\limits_{(A_\zeta)} \int\limits_{-\frac{b}{2}}^{\frac{b}{2}} \begin{bmatrix} u_0 & v_0 & w_0 \end{bmatrix} \begin{bmatrix} f_\xi \\ f_\eta \\ f_\zeta \end{bmatrix} d\zeta dA =$$

Külső erők munkája

$$= \int\limits_{(A_\zeta^-)} \begin{bmatrix} u_0 & v_0 & w_0 \end{bmatrix} \begin{bmatrix} 0 \\ 0 \\ p^- \end{bmatrix} dA - \int\limits_{(A_\zeta^+)} \begin{bmatrix} u_0 & v_0 & w_0 \end{bmatrix} \begin{bmatrix} 0 \\ 0 \\ p^+ \end{bmatrix} dA +$$

$$+ \int\limits_{(s)} \left(\left(u_0 n_\xi + v_0 n_\eta \right) N_n + \left(\varphi_\eta n_\xi - \varphi_\xi n_\eta \right) M_n \right) ds +$$

$$+ \int\limits_{(s)} \left(\left(u_0 t_\xi + v_0 t_\eta \right) N_{tn} + \left(\varphi_\eta t_\xi - \varphi_\xi t_\eta \right) M_{tn} \right) ds +$$

$$+ \int\limits_{(s)} w_0 Q_n ds +$$

$$+ \int\limits_{(A_\zeta)} \int\limits_{-\frac{b}{2}}^{\frac{b}{2}} \begin{bmatrix} u_0 & v_0 & w_0 \end{bmatrix} \begin{bmatrix} f_\xi \\ f_\eta \\ f_\zeta \end{bmatrix} d\zeta dA =$$

Külső erők munkája

$$= \int\limits_{(A_\zeta^-)} \begin{bmatrix} u_0 & v_0 & w_0 \end{bmatrix} \begin{bmatrix} 0 \\ 0 \\ p^- \end{bmatrix} dA - \int\limits_{(A_\zeta^+)} \begin{bmatrix} u_0 & v_0 & w_0 \end{bmatrix} \begin{bmatrix} 0 \\ 0 \\ p^+ \end{bmatrix} dA +$$

$$+ \int\limits_{(s)} \left(\left(u_0 n_\xi + v_0 n_\eta \right) N_n + \left(u_0 t_\xi + v_0 t_\eta \right) N_{tn} \right) ds +$$

$$+ \int\limits_{(s)} \left(\left(\varphi_\eta n_\xi - \varphi_\xi n_\eta \right) M_n + \left(\varphi_\eta t_\xi - \varphi_\xi t_\eta \right) M_{tn} \right) ds +$$

$$+ \int\limits_{(s)} w_0 Q_n ds +$$

$$+ \int\limits_{(A_\zeta)} \int\limits_{-\frac{b}{2}}^{\frac{b}{2}} \begin{bmatrix} u_0 & v_0 & w_0 \end{bmatrix} \begin{bmatrix} f_\xi \\ f_\eta \\ f_\zeta \end{bmatrix} d\zeta dA =$$

Külső erők munkája

$$= \int\limits_{(A_\zeta^-)} \begin{bmatrix} u_0 & v_0 & w_0 \end{bmatrix} \begin{bmatrix} 0 \\ 0 \\ p^- \end{bmatrix} dA - \int\limits_{(A_\zeta^+)} \begin{bmatrix} u_0 & v_0 & w_0 \end{bmatrix} \begin{bmatrix} 0 \\ 0 \\ p^+ \end{bmatrix} dA +$$

$$+ \int\limits_{(s)} \left(\begin{bmatrix} u_0 & v_0 \end{bmatrix} \begin{bmatrix} n_\xi \\ n_\eta \end{bmatrix} N_n + \begin{bmatrix} u_0 & v_0 \end{bmatrix} \begin{bmatrix} t_\xi \\ t_\eta \end{bmatrix} N_{tn} \right) ds +$$

$$+ \int\limits_{(s)} \left(\begin{bmatrix} \varphi_\eta & -\varphi_\xi \end{bmatrix} \begin{bmatrix} n_\xi \\ n_\eta \end{bmatrix} M_n + \begin{bmatrix} \varphi_\eta & -\varphi_\xi \end{bmatrix} \begin{bmatrix} t_\xi \\ t_\eta \end{bmatrix} M_{tn} \right) ds +$$

$$+ \int\limits_{(s)} w_0 Q_n ds +$$

$$+ \int\limits_{(A_\zeta)} \int\limits_{-\frac{b}{2}}^{\frac{b}{2}} \begin{bmatrix} u_0 & v_0 & w_0 \end{bmatrix} \begin{bmatrix} f_\xi \\ f_\eta \\ f_\zeta \end{bmatrix} d\zeta dA =$$

Külső erők munkája

$$= \int\limits_{(A_\zeta^-)} \begin{bmatrix} u_0 & v_0 & w_0 \end{bmatrix} \begin{bmatrix} 0 \\ 0 \\ p^- \end{bmatrix} dA - \int\limits_{(A_\zeta^+)} \begin{bmatrix} u_0 & v_0 & w_0 \end{bmatrix} \begin{bmatrix} 0 \\ 0 \\ p^+ \end{bmatrix} dA +$$

$$+ \int\limits_{(s)} \begin{bmatrix} u_0 & v_0 \end{bmatrix} \begin{bmatrix} n_\xi N_n + t_\xi N_{tn} \\ n_\eta N_n + t_\eta N_{tn} \end{bmatrix} ds +$$

$$+ \int\limits_{(s)} \begin{bmatrix} \varphi_\eta & -\varphi_\xi \end{bmatrix} \begin{bmatrix} n_\xi M_n + t_\xi M_{tn} \\ n_\eta M_n + t_\eta M_{tn} \end{bmatrix} ds +$$

$$+ \int\limits_{(s)} w_0 Q_n ds +$$

$$+ \int\limits_{(A_\zeta)} \int\limits_{-\frac{b}{2}}^{\frac{b}{2}} \begin{bmatrix} u_0 & v_0 & w_0 \end{bmatrix} \begin{bmatrix} f_\xi \\ f_\eta \\ f_\zeta \end{bmatrix} d\zeta dA =$$

Külső erők munkája

$$= \int\limits_{(A_\zeta^-)} \begin{bmatrix} u_0 & v_0 & w_0 \end{bmatrix} \begin{bmatrix} 0 \\ 0 \\ p^- \end{bmatrix} dA - \int\limits_{(A_\zeta^+)} \begin{bmatrix} u_0 & v_0 & w_0 \end{bmatrix} \begin{bmatrix} 0 \\ 0 \\ p^+ \end{bmatrix} dA +$$

$$+ \int\limits_{(s)} \begin{bmatrix} u_0 & v_0 \end{bmatrix} \begin{bmatrix} n_\xi & t_\xi \\ n_\eta & t_\eta \end{bmatrix} \begin{bmatrix} N_n \\ N_{tn} \end{bmatrix} ds +$$

$$+ \int\limits_{(s)} \begin{bmatrix} \varphi_\eta & -\varphi_\xi \end{bmatrix} \begin{bmatrix} n_\xi & t_\xi \\ n_\eta & t_\eta \end{bmatrix} \begin{bmatrix} M_n \\ M_{tn} \end{bmatrix} ds +$$

$$+ \int\limits_{(s)} w_0 Q_n ds +$$

$$+ \int\limits_{(A_\zeta)} \int\limits_{-\frac{b}{2}}^{\frac{b}{2}} \begin{bmatrix} u_0 & v_0 & w_0 \end{bmatrix} \begin{bmatrix} f_\xi \\ f_\eta \\ f_\zeta \end{bmatrix} d\zeta dA =$$

Külső erők munkája

$$= \int\limits_{(A_\zeta^-)} \begin{bmatrix} u_0 & v_0 & w_0 \end{bmatrix} \begin{bmatrix} 0 \\ 0 \\ p^- \end{bmatrix} dA - \int\limits_{(A_\zeta^+)} \begin{bmatrix} u_0 & v_0 & w_0 \end{bmatrix} \begin{bmatrix} 0 \\ 0 \\ p^+ \end{bmatrix} dA +$$

$$+ \int\limits_{(s)} \begin{bmatrix} u_0 & v_0 & w_0 \end{bmatrix} \begin{bmatrix} n_\xi & t_\xi & 0 \\ n_\eta & t_\eta & 0 \\ 0 & 0 & 0 \end{bmatrix} \begin{bmatrix} N_n \\ N_{tn} \\ 0 \end{bmatrix} ds + \int\limits_{(s)} \begin{bmatrix} \varphi_\eta & -\varphi_\xi \end{bmatrix} \begin{bmatrix} n_\xi & t_\xi \\ n_\eta & t_\eta \end{bmatrix} \begin{bmatrix} M_n \\ M_{tn} \end{bmatrix} ds +$$

$$+ \int\limits_{(s)} \begin{bmatrix} u_0 & v_0 & w_0 \end{bmatrix} \begin{bmatrix} 0 \\ 0 \\ Q_n \end{bmatrix} ds +$$

$$+ \int\limits_{(A_\zeta)} \int\limits_{-\frac{b}{2}}^{\frac{b}{2}} \begin{bmatrix} u_0 & v_0 & w_0 \end{bmatrix} \begin{bmatrix} f_\xi \\ f_\eta \\ f_\zeta \end{bmatrix} d\zeta dA =$$

Külső erők munkája

$$= \int\limits_{(A_\zeta^-)} \begin{bmatrix} u_0 & v_0 & w_0 \end{bmatrix} \begin{bmatrix} 0 \\ 0 \\ p^- \end{bmatrix} dA - \int\limits_{(A_\zeta^+)} \begin{bmatrix} u_0 & v_0 & w_0 \end{bmatrix} \begin{bmatrix} 0 \\ 0 \\ p^+ \end{bmatrix} dA +$$

$$+ \int\limits_{(s)} \begin{bmatrix} u_0 & v_0 & w_0 \end{bmatrix} \begin{bmatrix} n_\xi & t_\xi & 0 \\ n_\eta & t_\eta & 0 \\ 0 & 0 & 1 \end{bmatrix} \begin{bmatrix} N_n \\ N_{tn} \\ 0 \end{bmatrix} ds + \int\limits_{(s)} \begin{bmatrix} u_0 & v_0 & w_0 \end{bmatrix} \begin{bmatrix} n_\xi & t_\xi & 0 \\ n_\eta & t_\eta & 0 \\ 0 & 0 & 1 \end{bmatrix} \begin{bmatrix} 0 \\ 0 \\ Q_n \end{bmatrix} ds +$$

$$+ \int\limits_{(s)} \begin{bmatrix} \varphi_\eta & -\varphi_\xi \end{bmatrix} \begin{bmatrix} n_\xi & t_\xi \\ n_\eta & t_\eta \end{bmatrix} \begin{bmatrix} M_n \\ M_{tn} \end{bmatrix} ds +$$

$$+ \int\limits_{(A_\zeta)} \int\limits_{-\frac{b}{2}}^{\frac{b}{2}} \begin{bmatrix} u_0 & v_0 & w_0 \end{bmatrix} \begin{bmatrix} f_\xi \\ f_\eta \\ f_\zeta \end{bmatrix} d\zeta dA =$$

Külső erők munkája

$$= \int\limits_{(A_\zeta^-)} \begin{bmatrix} u_0 & v_0 & w_0 \end{bmatrix} \begin{bmatrix} 0 \\ 0 \\ p^- \end{bmatrix} dA - \int\limits_{(A_\zeta^+)} \begin{bmatrix} u_0 & v_0 & w_0 \end{bmatrix} \begin{bmatrix} 0 \\ 0 \\ p^+ \end{bmatrix} dA +$$

$$+ \int\limits_{(s)} \begin{bmatrix} u_0 & v_0 & w_0 \end{bmatrix} \begin{bmatrix} n_\xi & t_\xi & 0 \\ n_\eta & t_\eta & 0 \\ 0 & 0 & 1 \end{bmatrix} \begin{bmatrix} N_n \\ N_{tn} \\ Q_n \end{bmatrix} ds +$$

$$+ \int\limits_{(s)} \begin{bmatrix} \varphi_\eta & -\varphi_\xi \end{bmatrix} \begin{bmatrix} n_\xi & t_\xi \\ n_\eta & t_\eta \end{bmatrix} \begin{bmatrix} M_n \\ M_{tn} \end{bmatrix} ds +$$

$$+ \int\limits_{(A_\zeta)} \begin{bmatrix} u_0 & v_0 & w_0 \end{bmatrix} \begin{bmatrix} f_\xi \\ f_\eta \\ f_\zeta \end{bmatrix} b \, dA =$$

Külső erők munkája

$$= \int\limits_{(A_\zeta^-)} \begin{bmatrix} u_0 & v_0 & w_0 \end{bmatrix} \begin{bmatrix} 0 \\ 0 \\ p^- \end{bmatrix} dA - \int\limits_{(A_\zeta^+)} \begin{bmatrix} u_0 & v_0 & w_0 \end{bmatrix} \begin{bmatrix} 0 \\ 0 \\ p^+ \end{bmatrix} dA +$$

$$+ \int\limits_{(s)} \begin{bmatrix} u_0 & v_0 & w_0 \end{bmatrix} \begin{bmatrix} n_\xi & -n_\eta & 0 \\ n_\eta & n_\xi & 0 \\ 0 & 0 & 1 \end{bmatrix} \begin{bmatrix} N_n \\ N_{tn} \\ Q_n \end{bmatrix} ds +$$

$$+ \int\limits_{(s)} \begin{bmatrix} \varphi_\eta & -\varphi_\xi \end{bmatrix} \begin{bmatrix} n_\xi & -n_\eta \\ n_\eta & n_\xi \end{bmatrix} \begin{bmatrix} M_n \\ M_{tn} \end{bmatrix} ds +$$

$$+ \int\limits_{(A_\zeta)} \begin{bmatrix} u_0 & v_0 & w_0 \end{bmatrix} \begin{bmatrix} f_\xi \\ f_\eta \\ f_\zeta \end{bmatrix} b\, dA \approx$$

Külső erők munkája

$$\approx \int_{(s)} \begin{bmatrix} u_0 & v_0 & w_0 \end{bmatrix} \begin{bmatrix} n_\xi & -n_\eta & 0 \\ n_\eta & n_\xi & 0 \\ 0 & 0 & 1 \end{bmatrix} \begin{bmatrix} N_n \\ N_{tn} \\ Q_n \end{bmatrix} ds +$$

$$+ \int_{(s)} \begin{bmatrix} \varphi_\eta & \varphi_\xi \end{bmatrix} \begin{bmatrix} n_\xi & -n_\eta \\ -n_\eta & -n_\xi \end{bmatrix} \begin{bmatrix} M_n \\ M_{tn} \end{bmatrix} ds +$$

$$+ \int_{(A_\zeta)} \begin{bmatrix} u_0 & v_0 & w_0 \end{bmatrix} \begin{bmatrix} bf_\xi \\ bf_\eta \\ bf_\zeta + p^- - p^+ \end{bmatrix} dA$$

Külső erők munkája

$$\approx \int_{(s)} \begin{bmatrix} u_0 & v_0 & w_0 \end{bmatrix} \begin{bmatrix} n_\xi & -n_\eta & 0 \\ n_\eta & n_\xi & 0 \\ 0 & 0 & 1 \end{bmatrix} \begin{bmatrix} N_n \\ N_{tn} \\ Q_n \end{bmatrix} ds +$$

$$+ \int_{(s)} \begin{bmatrix} \varphi_\xi & \varphi_\eta \end{bmatrix} \begin{bmatrix} -n_\eta & -n_\xi \\ n_\xi & -n_\eta \end{bmatrix} \begin{bmatrix} M_n \\ M_{tn} \end{bmatrix} ds +$$

$$+ \int_{(A_\zeta)} \begin{bmatrix} u_0 & v_0 & w_0 \end{bmatrix} \begin{bmatrix} bf_\xi \\ bf_\eta \\ bf_\zeta + p^- - p^+ \end{bmatrix} dA$$

Külső erők munkája

$$\approx \int_{(s)} \begin{bmatrix} u_0 & v_0 & w_0 & \varphi_\xi & \varphi_\eta \end{bmatrix} \begin{bmatrix} n_\xi & -n_\eta & 0 & 0 & 0 \\ n_\eta & n_\xi & 0 & 0 & 0 \\ 0 & 0 & 1 & 0 & 0 \\ 0 & 0 & 0 & -n_\eta & -n_\xi \\ 0 & 0 & 0 & n_\xi & -n_\eta \end{bmatrix} \begin{bmatrix} N_n \\ N_{tn} \\ Q_n \\ M_n \\ M_{tn} \end{bmatrix} ds +$$

$$+ \int_{(A_\zeta)} \begin{bmatrix} u_0 & v_0 & w_0 & \varphi_\xi & \varphi_\eta \end{bmatrix} \begin{bmatrix} bf_\xi \\ bf_\eta \\ bf_\zeta + p^- - p^+ \\ 0 \\ 0 \end{bmatrix} dA$$

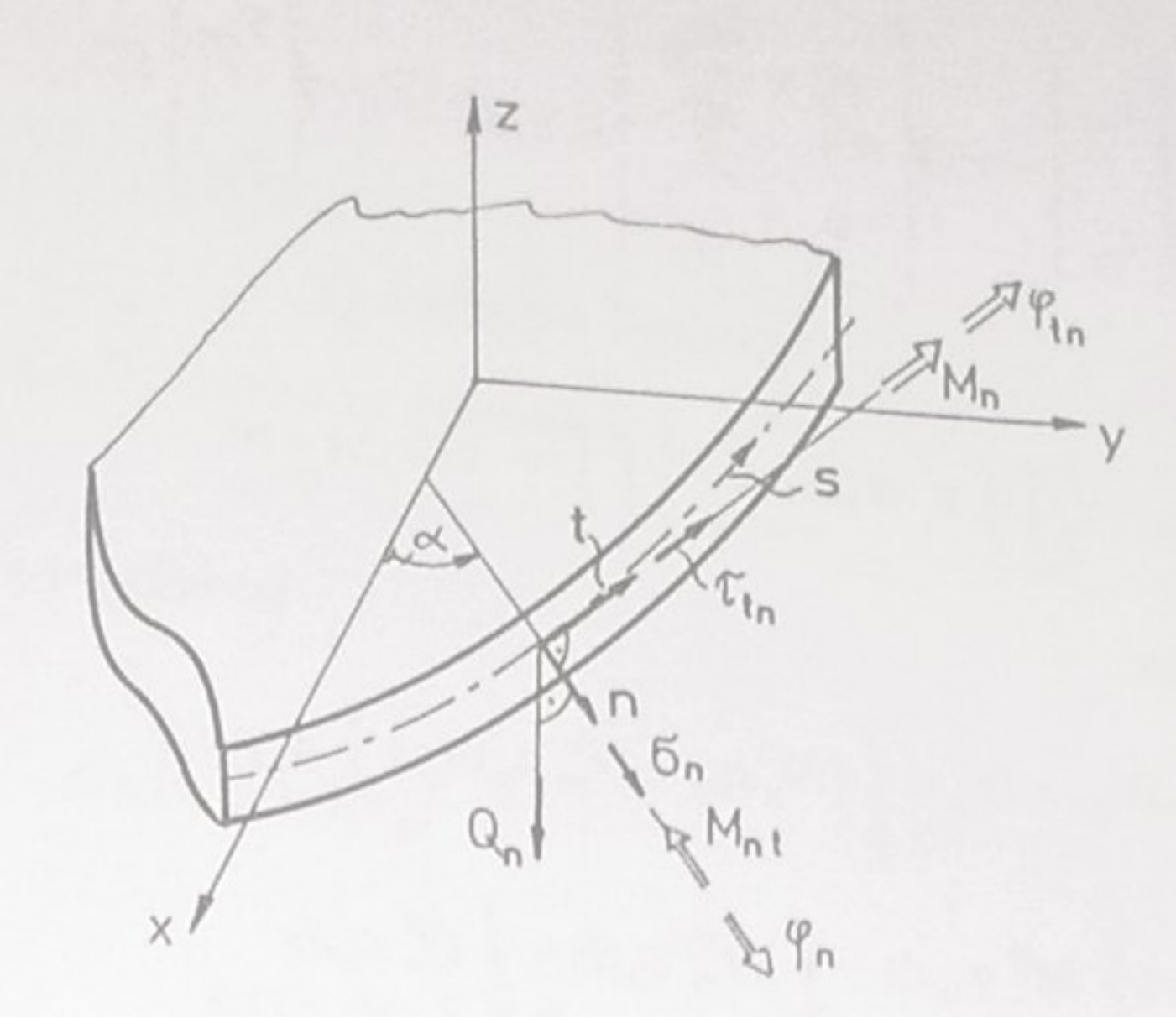
z
y
x
s
t
n
α
φ_{tn}
M_n
τ_{tn}
σ_n
Q_n
M_{nt}
φ_n

Potenciális energia

Potenciális energia

$$\Pi_p = \frac{1}{2}\int\limits_{(A)} \begin{bmatrix} \frac{\partial u_0}{\partial \xi} & \frac{\partial v_0}{\partial \eta} & \frac{\partial u_0}{\partial \eta} + \frac{\partial v_0}{\partial \xi} \end{bmatrix} \left(\frac{Eb}{1-\nu^2} \begin{bmatrix} 1 & \nu & 0 \\ \nu & 1 & 0 \\ 0 & 0 & \frac{1-\nu}{2} \end{bmatrix} \right) \begin{bmatrix} \frac{\partial u_0}{\partial \xi} \\ \frac{\partial v_0}{\partial \eta} \\ \frac{\partial u_0}{\partial \eta} + \frac{\partial v_0}{\partial \xi} \end{bmatrix} dA +$$

$$+\frac{1}{2}\int\limits_{(A)} \begin{bmatrix} \frac{\partial \varphi_\eta}{\partial \xi} & -\frac{\partial \varphi_\xi}{\partial \eta} & \frac{\partial \varphi_\eta}{\partial \eta} - \frac{\partial \varphi_\xi}{\partial \xi} \end{bmatrix} \left(\frac{Eb^3}{12\left(1-\nu^2\right)} \begin{bmatrix} 1 & \nu & 0 \\ \nu & 1 & 0 \\ 0 & 0 & \frac{1-\nu}{2} \end{bmatrix} \right) \begin{bmatrix} \frac{\partial \varphi_\eta}{\partial \xi} \\ -\frac{\partial \varphi_\xi}{\partial \eta} \\ \frac{\partial \varphi_\eta}{\partial \eta} - \frac{\partial \varphi_\xi}{\partial \xi} \end{bmatrix} dA +$$

$$+\frac{1}{2}\int\limits_{(A)} \begin{bmatrix} \frac{\partial w_0}{\partial \eta} - \varphi_\xi & \frac{\partial w_0}{\partial \xi} + \varphi_\eta \end{bmatrix} \left(\frac{Eb}{2\left(1+\nu\right)} \begin{bmatrix} 1 & 0 \\ 0 & 1 \end{bmatrix} \right) \begin{bmatrix} \frac{\partial w_0}{\partial \eta} - \varphi_\xi \\ \frac{\partial w_0}{\partial \xi} + \varphi_\eta \end{bmatrix} dA -$$

Potenciális energia

$$-\int_{(s)} \begin{bmatrix} u_0 & v_0 & w_0 & \varphi_\xi & \varphi_\eta \end{bmatrix} \begin{bmatrix} n_\xi & -n_\eta & 0 & 0 & 0 \\ n_\eta & n_\xi & 0 & 0 & 0 \\ 0 & 0 & 1 & 0 & 0 \\ 0 & 0 & 0 & -n_\eta & -n_\xi \\ 0 & 0 & 0 & n_\xi & -n_\eta \end{bmatrix} \begin{bmatrix} N_n \\ N_{tn} \\ Q_n \\ M_n \\ M_{tn} \end{bmatrix} ds -$$

$$-\int_{(A_\zeta)} \begin{bmatrix} u_0 & v_0 & w_0 & \varphi_\xi & \varphi_\eta \end{bmatrix} \begin{bmatrix} bf_\xi \\ bf_\eta \\ bf_\zeta + p^- - p^+ \\ 0 \\ 0 \end{bmatrix} dA$$

Potenciális energia

$$\Pi_p = \frac{1}{2}\int\limits_{(A)} \begin{bmatrix} u_0 & v_0 \end{bmatrix} \begin{bmatrix} \frac{\partial}{\partial\xi} & 0 & \frac{\partial}{\partial\eta} \\ 0 & \frac{\partial}{\partial\eta} & \frac{\partial}{\partial\xi} \end{bmatrix} \left(\frac{Eb}{1-\nu^2} \begin{bmatrix} 1 & \nu & 0 \\ \nu & 1 & 0 \\ 0 & 0 & \frac{1-\nu}{2} \end{bmatrix} \right) \begin{bmatrix} \frac{\partial}{\partial\xi} & 0 \\ 0 & \frac{\partial}{\partial\eta} \\ \frac{\partial}{\partial\eta} & \frac{\partial}{\partial\xi} \end{bmatrix} \begin{bmatrix} u_0 \\ v_0 \end{bmatrix} dA +$$

$$+\frac{1}{2}\int\limits_{(A)} \begin{bmatrix} \varphi_\xi & \varphi_\eta \end{bmatrix} \begin{bmatrix} 0 & -\frac{\partial}{\partial\eta} & -\frac{\partial}{\partial\xi} \\ \frac{\partial}{\partial\xi} & 0 & \frac{\partial}{\partial\eta} \end{bmatrix} \left(\frac{Eb^3}{12\left(1-\nu^2\right)} \begin{bmatrix} 1 & \nu & 0 \\ \nu & 1 & 0 \\ 0 & 0 & \frac{1-\nu}{2} \end{bmatrix} \right) \begin{bmatrix} 0 & \frac{\partial}{\partial\xi} \\ -\frac{\partial}{\partial\eta} & 0 \\ -\frac{\partial}{\partial\xi} & \frac{\partial}{\partial\eta} \end{bmatrix} \begin{bmatrix} \varphi_\xi \\ \varphi_\eta \end{bmatrix} dA +$$

$$+\frac{1}{2}\int\limits_{(A)} \begin{bmatrix} w_0 & \varphi_\xi & \varphi_\eta \end{bmatrix} \begin{bmatrix} \frac{\partial}{\partial\eta} & \frac{\partial}{\partial\xi} \\ -1 & 0 \\ 0 & 1 \end{bmatrix} \left(\frac{Eb}{2\left(1+\nu\right)} \begin{bmatrix} 1 & 0 \\ 0 & 1 \end{bmatrix} \right) \begin{bmatrix} \frac{\partial}{\partial\eta} & -1 & 0 \\ \frac{\partial}{\partial\xi} & 0 & 1 \end{bmatrix} \begin{bmatrix} w_0 \\ \varphi_\xi \\ \varphi_\eta \end{bmatrix} dA -$$

Potenciális energia

$$-\int_{(s)} \begin{bmatrix} u_0 & v_0 & w_0 & \varphi_\xi & \varphi_\eta \end{bmatrix} \begin{bmatrix} n_\xi & -n_\eta & 0 & 0 & 0 \\ n_\eta & n_\xi & 0 & 0 & 0 \\ 0 & 0 & 1 & 0 & 0 \\ 0 & 0 & 0 & -n_\eta & -n_\xi \\ 0 & 0 & 0 & n_\xi & -n_\eta \end{bmatrix} \begin{bmatrix} N_n \\ N_{tn} \\ Q_n \\ M_n \\ M_{tn} \end{bmatrix} ds -$$

$$-\int_{(A_\zeta)} \begin{bmatrix} u_0 & v_0 & w_0 & \varphi_\xi & \varphi_\eta \end{bmatrix} \begin{bmatrix} bf_\xi \\ bf_\eta \\ bf_\zeta + p^- - p^+ \\ 0 \\ 0 \end{bmatrix} dA$$

Potenciális energia

$$\Pi_p = \frac{1}{2}\int\limits_{(A)} \begin{bmatrix} u_0 & v_0 \end{bmatrix} \begin{bmatrix} \frac{\partial}{\partial\xi} & 0 & \frac{\partial}{\partial\eta} \\ 0 & \frac{\partial}{\partial\eta} & \frac{\partial}{\partial\xi} \end{bmatrix} \left(\frac{Eb}{1-\nu^2} \begin{bmatrix} 1 & \nu & 0 \\ \nu & 1 & 0 \\ 0 & 0 & \frac{1-\nu}{2} \end{bmatrix} \right) \begin{bmatrix} \frac{\partial}{\partial\xi} & 0 \\ 0 & \frac{\partial}{\partial\eta} \\ \frac{\partial}{\partial\eta} & \frac{\partial}{\partial\xi} \end{bmatrix} \begin{bmatrix} u_0 \\ v_0 \\ \\ \\ \end{bmatrix} dA +$$

$$+\frac{1}{2}\int\limits_{(A)} \begin{bmatrix} & & \varphi_\xi & \varphi_\eta \end{bmatrix} \begin{bmatrix} 0 & -\frac{\partial}{\partial\eta} & -\frac{\partial}{\partial\xi} \\ \frac{\partial}{\partial\xi} & 0 & \frac{\partial}{\partial\eta} \end{bmatrix} \left(\frac{Eb^3}{12\left(1-\nu^2\right)} \begin{bmatrix} 1 & \nu & 0 \\ \nu & 1 & 0 \\ 0 & 0 & \frac{1-\nu}{2} \end{bmatrix} \right) \begin{bmatrix} 0 & \frac{\partial}{\partial\xi} \\ -\frac{\partial}{\partial\eta} & 0 \\ -\frac{\partial}{\partial\xi} & \frac{\partial}{\partial\eta} \end{bmatrix} \begin{bmatrix} \\ \\ \varphi_\xi \\ \varphi_\eta \end{bmatrix} dA +$$

$$+\frac{1}{2}\int\limits_{(A)} \begin{bmatrix} & w_0 & \varphi_\xi & \varphi_\eta \end{bmatrix} \begin{bmatrix} \frac{\partial}{\partial\eta} & \frac{\partial}{\partial\xi} \\ -1 & 0 \\ 0 & 1 \end{bmatrix} \left(\frac{Eb}{2\left(1+\nu\right)} \begin{bmatrix} 1 & 0 \\ 0 & 1 \end{bmatrix} \right) \begin{bmatrix} \frac{\partial}{\partial\eta} & -1 & 0 \\ \frac{\partial}{\partial\xi} & 0 & 1 \end{bmatrix} \begin{bmatrix} \\ w_0 \\ \varphi_\xi \\ \varphi_\eta \end{bmatrix} dA -$$

Potenciális energia

$$-\int_{(s)} \begin{bmatrix} u_0 & v_0 & w_0 & \varphi_\xi & \varphi_\eta \end{bmatrix} \begin{bmatrix} n_\xi & -n_\eta & 0 & 0 & 0 \\ n_\eta & n_\xi & 0 & 0 & 0 \\ 0 & 0 & 1 & 0 & 0 \\ 0 & 0 & 0 & -n_\eta & -n_\xi \\ 0 & 0 & 0 & n_\xi & -n_\eta \end{bmatrix} \begin{bmatrix} N_n \\ N_{tn} \\ Q_n \\ M_n \\ M_{tn} \end{bmatrix} ds -$$

$$-\int_{(A_\zeta)} \begin{bmatrix} u_0 & v_0 & w_0 & \varphi_\xi & \varphi_\eta \end{bmatrix} \begin{bmatrix} bf_\xi \\ bf_\eta \\ bf_\zeta + p^- - p^+ \\ 0 \\ 0 \end{bmatrix} dA$$

Reissner-Mindlin-lemezelmélet

Potenciális energia

Potenciális energia

Potenciális energia

Összefoglalás

- A modell ?? független „elmozdulás” koordinátával rendelkezik.
- A rudat térbeli erő és nyomaték terhelheti, azaz kényszerekkel egy keresztmetszetben hat szabadsági fok köthető le.

Kirchhoff-Love-lemezelmélet

Feltételezés

A keresztmetszet merőleges marad a rúd alakváltozott középvonalára:

$$\varphi_\xi = -\frac{dv_S}{d\zeta} \qquad \text{és} \qquad \varphi_\eta = \frac{du_S}{d\zeta}$$

Potenciális energia

Potenciális energia

Potenciális energia

Potenciális energia

Összefoglalás

- A modell három független „elmozdulás” koordinátával rendelkezik.
- A rudat térbeli erő és nyomaték terhelheti, azaz kényszerekkel egy keresztmetszetben hat szabadsági fok köthető le.